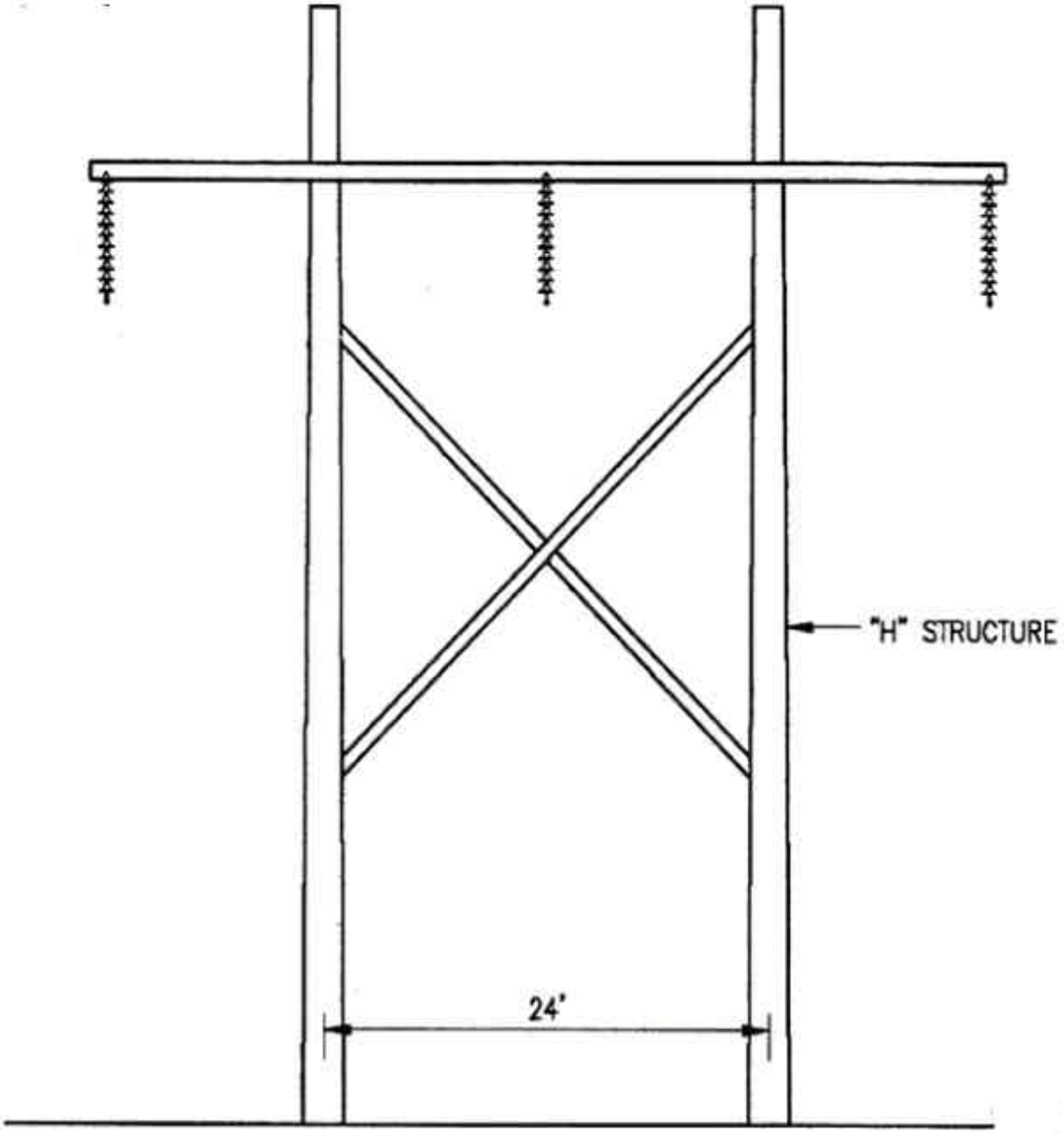

Typical Single-Circuit 230-kV H-Frame Structure
FIGURE 2.4

Desert Southwest Transmission Project

J:\1324-01\arcview\project\Base.apr 1/30/03